XXV-TC Pellet Stove

HARMAN®

BUILT TO A STANDARD, NOT A PRICE

This tribute to decades of Harman success burns with an uncompromising commitment to quality. The XXV-TC pellet stove is popular for its cast iron workmanship and intricate oak leaf styling, but loved for its unmatched temperature accuracy and control. Harman continues to raise the standard for excellence, with the revolutionary EASY Touch Control system making the pellet stove experience easier and more intuitive than ever before.

EASY Touch Control

The Harman EASY Touch Control is the most advanced control system ever created—and makes it easy to heat your home:

- Easy: Operate your stove with our intuitive, Harman-exclusive touch control
- Accurate: Keep your desired heat levels all day, every day and fuel using the scheduling feature and wireless room sensor
- Smart: Maintain optimal stove performance with automatic maintenance notifications and intelligent diagnostics
- Yearly Savings: Save more money on your heating bill with Harman's industry-leading technology and features

Cover: XXV-TC in Porcelain Majolica Brown finish
Left: XXV-TC in Matte Black finish
Above: XXV-TC in Porcelain Majolica Brown finish

Features

- Smart operation with EASY Touch Controls
- Near silence in Whisper mode[1]
- View fuel levels easily with tinted hopper lid
- Less loading with 65lb hopper capacity
- Elegant flame-reactive mirrored glass
- Installation made easy with direct vent
- Temperature accuracy with wireless room sensor

Options

- Matte Black, Porcelain Twilight, Porcelain Majolica Brown
- Direct vent wall pass-through
- Outside air kit
- Top vent adapter
- Outside temperature kit

Matte Black (standard)

Porcelain Twilight

Porcelain Majolica Brown

Key Technologies

EASY Touch Control Harman's easy-to-use, industry-leading touch control provides one screen operation and access to optional menus such as scheduling, diagnostics, cleaning prompts and fuel gauges that give you complete control of your stove.

Wireless Room Sensor Complements the EASY Touch Control system and gives you the most precise temperatures where you want to feel the heat.

PelletPro™ Technology This patented system makes it possible to burn any grade of pellet fuel with maximum heat and efficiency. A bottom-up feed system burns each pellet completely and allows for 24-hour heating.

ESP Temperature Control This stove utilizes an Exhaust Sensing Probe (ESP) system to deliver precision heating control. ESP constantly monitors and adjusts heat output to maintain set room temperatures within one degree.

Specifications

BTU/hr Input[2]..... 11,000 - 48,000
Efficiency[3].....78% LHV; 73% HHV
Emissions.....1.75 g/hr
Heating Capacity[4].....900-2,300 sq ft
Hopper Capacity.....65 lb
Fuel Type.....Pellet
Feed Rate.....1.8-5.4 lb/hr
Venting Size.....3"
Weight.....365 lb

Front View

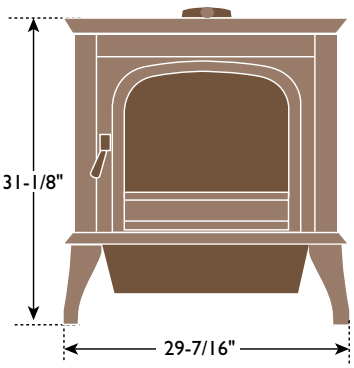

Side View

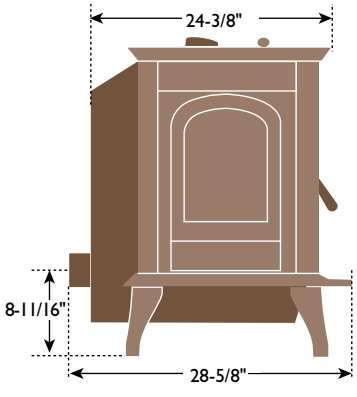

Clearance to Combustibles

Minimum Floor Protection

Standard..... 36"x 29"

Corner..... 36"x 36"[5]

Standard Installation

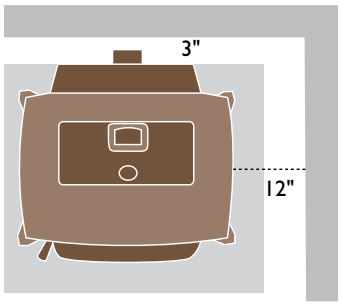

Floor protection
36" x 29" minimum

Corner Installation

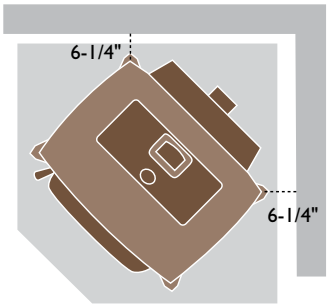

Corner floor protection
36" x 36" minimum

Your Harman dealer is:

HARMAN®
BUILT TO A STANDARD, NOT A PRICE

PHONE: 800-664-3119
WWW.HARMANSTOVES.COM
facebook.com/HarmanStoves
twitter.com/HarmanStoves
youtube.com/HarmanStoves

HAR-1712U-0221

LIMITED LIFETIME WARRANTY[6]

The strongest in the industry, Harman provides a limited lifetime warranty on most important aspects: firebox and heat exchanger.

[1] Based on third party accredited lab testing with units set on high and Absolute43 in Whisper mode. [2]EPA tested input [3]Weighted average LHV (Low Heating Value) efficiency. HHV (High Heat Value) efficiency used to qualify products for Tax Credit beginning in 2021. [4]See your local authorized Harman dealer for help in determining the product that best suits your heating needs based on climate and home efficiency. [5]Minimum size corner hearthpad will not touch the wall. Wall to stove clearances are priority. [6]For full warranty details, visit www.harmanstoves.com.

Actual product appearance, including flame, may differ from image. Tested by OMNI-Test Laboratories - ASTM E 1509-04, ULC/ORD-C1482-M1990, ULC-S627-00. Product specifications and pricing subject to change without notice. The images and descriptions in this brochure are provided to assist you in product selection only. Fuel density and pellet shape may affect hopper capacity. BTU's may vary depending on type of fuel used. Refer to installation manual for complete clearance requirements and specifications.

Fireplace, stove and insert surfaces get extremely HOT and can cause severe burns if touched. Keep a safe distance away. To learn more visit www.harmanstoves.com/fireplacesafety